Oil Draining Device DIN 42551 A

The oil draining device is to be welded in the transformer case. The device is to be used together with the connection pipe F DIN 42551 for draining the transformer case for regeneration purpose of the oil. The oil drain device remains tight even if the oil temperature rises to 100° C (Temparature Resistance: up to 100° C)

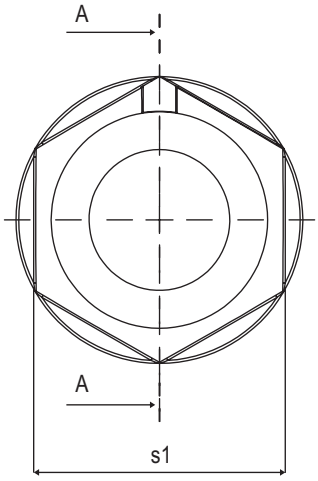

DIN TYPE

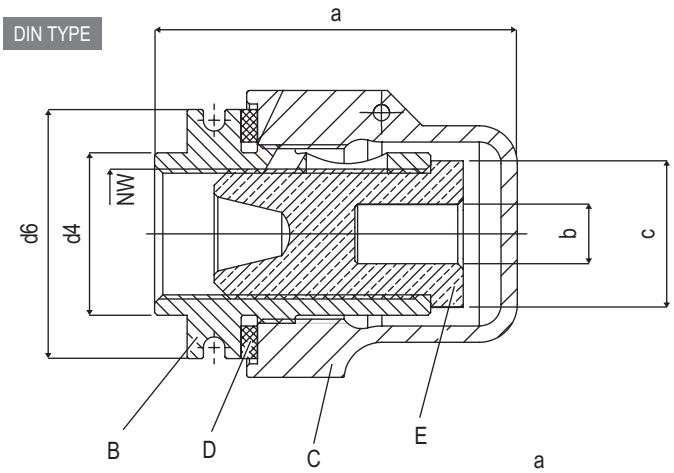

MODIFIED TYPE

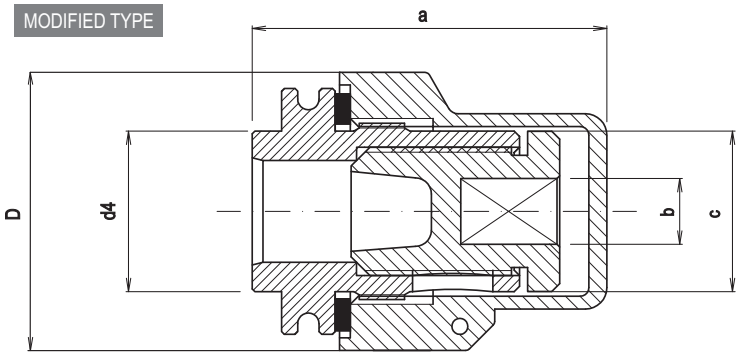

O-Ring Type

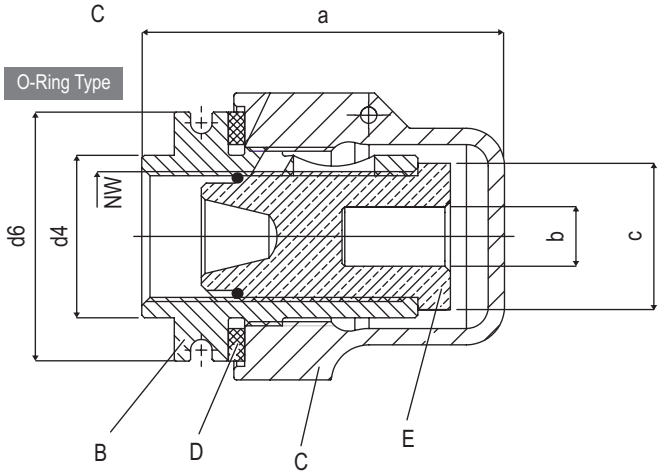

Brass/Aluminium stop plug is possible

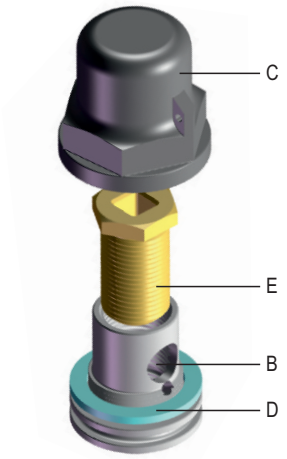

NW	a	d4	b	c	s1 / d6	Weight
NW22	67	30	11	SW27	SW46	0.56 kg.
NW31	93	40	17	SW36	SW65	1.29 kg.
NW40	112	52	17	SW46	SW80	2,25 kg.

Qty	Code	Designation	Material
1	B	Drain Socket	S235JR
1	C	Stop Plug	Gg20
1	D	Gasket	Klingerid
1	E	Inner Bolt	Ms 58

Ares Trafo Ekipmanları San. ve Tic. Ltd. Şti.
Sarımeşe Mh. Nazım Demirci Cd. No:294 Kartepe - Kocaeli - Turkey
Tel: +90 262 371 13 22 - 23 - 24 - 25 Fax: +90 262 371 13 26
E-mail: info@ares-trafo.com www.ares-trafo.com

Aret Metalltechnik GmbH- Hausinger Str. 6, D-40764 Langenfeld
Tel : +49 - (0)2173 – 1017663 Fax: +49 - (0)2173 – 1017665
E-Mail: info@aret-trafo.de Web : www.aret-trafo.de

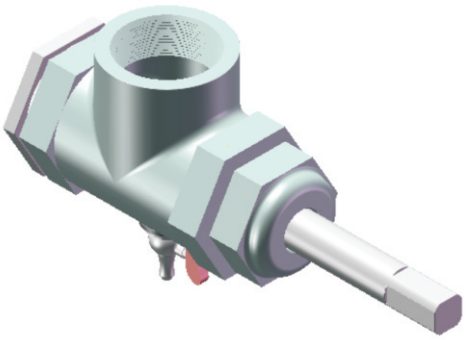

Connection pipe is a tool to connect the oil drain valves A DIN 42551 to an extern oil-system. Connection pipe is manufactured in two sizes and can be reduced of nominal width NW 31 to NW 22 or NW 40 to NW 31

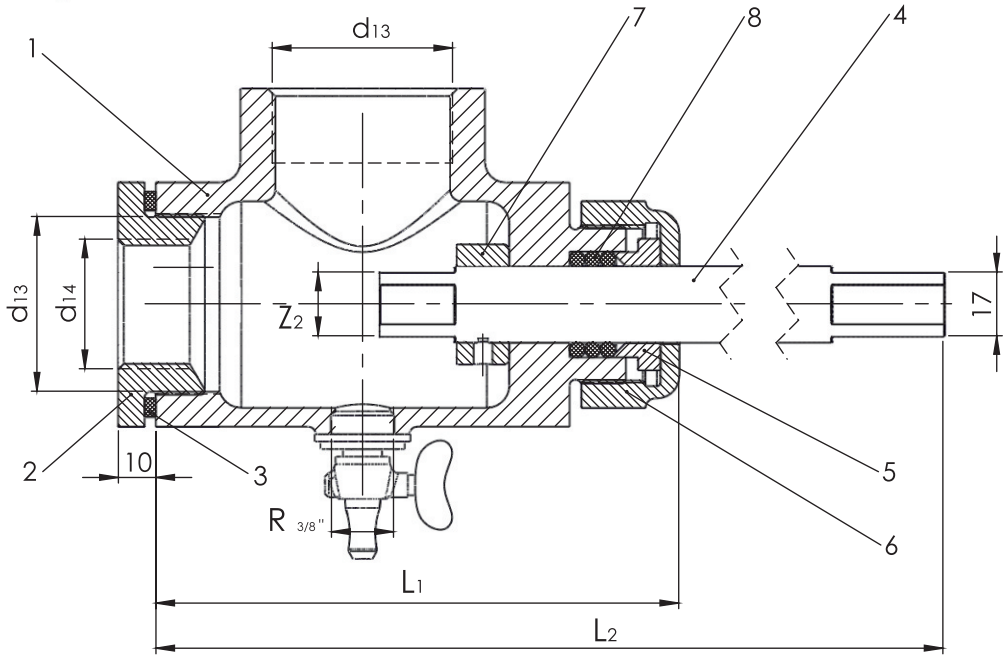

Connection Pipe	NW	d13	d14	Z2	L1	L2	Weight kg.
F22/31 DIN 42 551	22	M 48x1,5	M 33x1,5	11	145	260	2,6
F31/40 DIN 42 551	31	M 60x2	M 48x1,5	17	180	270	2,6
F31 DIN 42 551	31	M 48x1,5	———	17	148	260	2,4
F40 DIN 42 551	40	M 60x2	———	17	180	295	5,2

Part Nr.	Oty	Connection Pipe	F 22/31 DIN 42 551	F 31/40 DIN 42 551	F 31 DIN 42 551	F 40 DIN 42 551	Material
1	1	Housing	G65 DIN 42 551	G80 DIN 42 551	G65 DIN 42 551	G80 DIN 42 551	GG18
2	1	Reduction	H 22/31 DIN 42 551	H31/40 DIN 42 551	———	———	St 34
3	1	Gasket	D31 DIN 42 551	D40 DIN 42 551	———	———	
4	1	Spindle	K1 DIN 42 551	K2 DIN 42 551	K3 DIN 42 551	K3 DIN 42 551	St 34
5	1	Packing Box	L DIN 42 551				St 34
6	1	Srew Cap	N DIN 42 551 GG20				GG20
7	1	Stop Ring	B20 DIN 705 St34				St 34
8	1	Packing	4x4x320 Free of asbestos				

Ares Trafo Ekipmanları San. ve Tic. Ltd. Şti.
Sarımeşe Mh. Nazım Demirci Cd. No:294 Kartepe - Kocaeli - Turkey
Tel: +90 262 371 13 22 - 23 - 24 - 25 Fax: +90 262 371 13 26
E-mail: info@ares-trafo.com www.ares-trafo.com

Aret Metalltechnik GmbH- Hausinger Str. 6, D-40764 Langenfeld
Tel : +49 - (0)2173 – 1017663 Fax: +49 - (0)2173 – 1017665
E-Mail: info@aret-trafo.de Web : www.aret-trafo.de